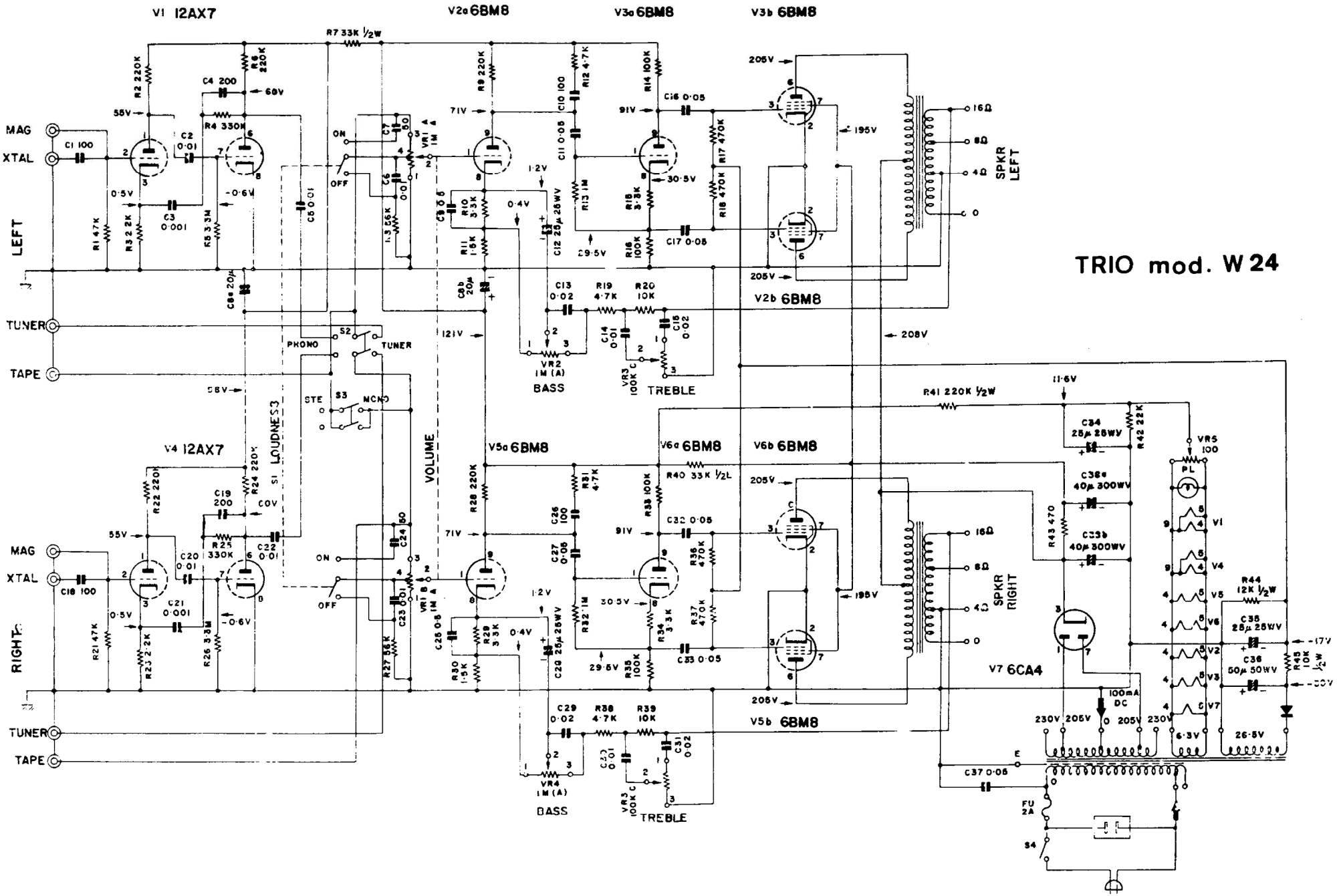
TRIO mod. W24
V1 12AX7
V2a 6BM8
V3a 6BM8
V3b 6BM8
V2b 6BM8
V4 12AX7
V5a 6BM8
V6a 6BM8
V6b 6BM8
V5b 6BM8
V7 6CA4
MAG
XTAL
LEFT
RIGHT
TUNER
TAPE
SPKR LEFT
SPKR RIGHT
VOLUME
S1 LOUDNESS
PHONO
TUNER
STE
MONO
ON
OFF
BASS
TREBLE
VR2 1M (A)
VR3 100K C
VR4 1M (A)
VR5 100
PL
100mA DC
FU 2A
S4
R7 33K ½W
R40 33K ½L
R41 220K ½W
R44 12K ½W
R45 10K ½W
C34 25μ 25WV
C38a 40μ 300WV
C38b 40μ 300WV
C35 25μ 25WV
C36 50μ 50WV
C37 0·05
C1 100
C2 0·01
C3 0·001
C4 200
C5 0·01
C6 0·01
C7 50
C8a 20μ
C8b 20μ
C9 0·5
C10 100
C11 0·05
C12 25μ 25WV
C13 0·02
C14 0·01
C15 0·02
C16 0·05
C17 0·05
C18 100
C19 200
C20 0·01
C21 0·001
C22 0·01
C23 0·01
C24 50
C25 0·5
C26 100
C27 0·05
C28 25μ 25WV
C29 0·02
C30 0·01
C31 0·02
C32 0·05
C33 0·05
R1 47K
R2 220K
R3 2·2K
R4 330K
R5 3·3M
R6 220K
R8 220K
R9 220K
R10 3·3K
R11 1·5K
R12 4·7K
R13 1M
R14 100K
R15 3·3K
R16 100K
R17 470K
R18 470K
R19 4·7K
R20 10K
R21 47K
R22 220K
R23 2·2K
R24 220K
R25 330K
R26 3·3M
R27 56K
R28 220K
R29 3·3K
R30 1·5K
R31 4·7K
R32 1M
R33 100K
R34 3·3K
R35 100K
R36 470K
R37 470K
R38 4·7K
R39 10K
R42 22K
R43 470
R44 12K ½W
R45 10K ½W
55V
60V
71V
91V
205V
195V
208V
121V
58V
30·5V
29·5V
11·6V
0·5V
-0·6V
0·4V
1·2V
16Ω
8Ω
4Ω
0
-17V
-30V
6·3V
26·5V
230V
205V